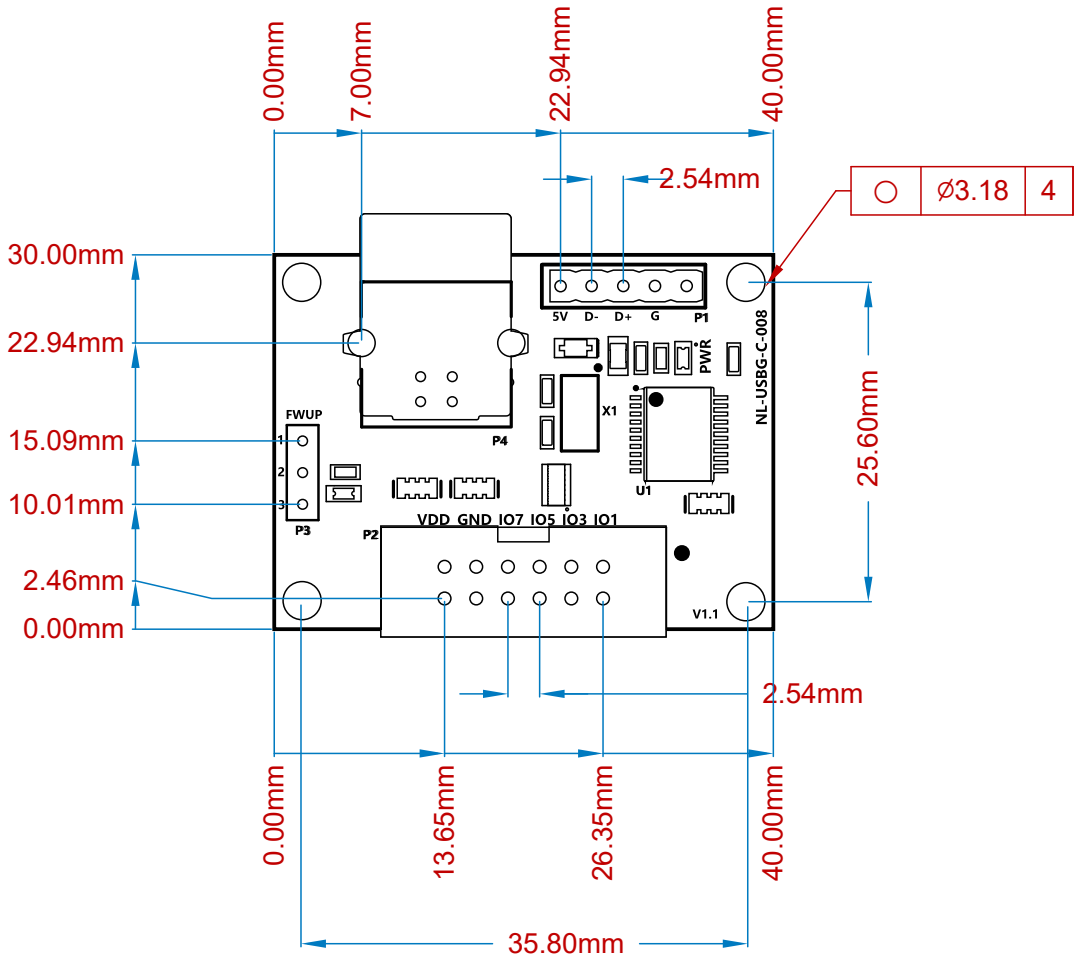
0.00mm
7.00mm
22.94mm
40.00mm
2.54mm
30.00mm
22.94mm
15.09mm
10.01mm
2.46mm
0.00mm
25.60mm
2.54mm
0.00mm
13.65mm
26.35mm
40.00mm
35.80mm
Ø3.18
4
5V D- D+ G
P1
PWR
NL-USBG-C-008
X1
U1
FWUP
P3
P4
P2
VDD GND IO7 IO5 IO3 IO1
V1.1

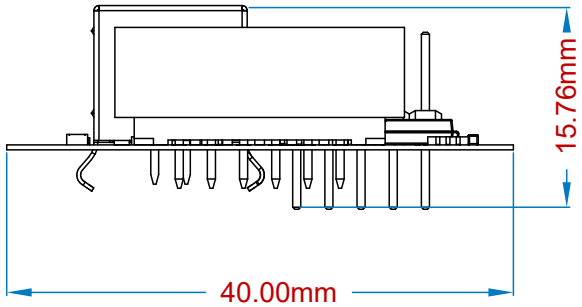
15.76mm
40.00mm